THE ABSORPTION OF THE HARD COMPONENT OF COSMIC RAYS IN WATER

By A. J. Dyer*

[*Manuscript received October* 15, 1952]

Summary

The differential and integral range spectra of the hard component of cosmic rays in water have been measured down to a depth of 18·3 m. of water, and the integral results confirm the work of Ehmert (1937) and Wilson (1938) in this region. A lack of statistical accuracy in the differential measurements prevents the possible observation of an anomaly corresponding to 2·5 BeV./c. momentum. A comparison of the range and momentum spectra on the basis of the energy loss data of Halpern and Hall shows satisfactory agreement. The absolute value of the differential intensity is found to be 20 per cent. higher than that given by Rossi (1948) but agrees with the more recent result of York (1952).

I. Introduction

The momentum spectrum of the hard component at sea-level has been determined by magnetic deflection methods by Blackett (1937), Jones (1939), Hughes (1940), Wilson (1946), Glaser, Hamermesh, and Safonov (1950), and Caro, Parry, and Rathgeber (1951). Several authors have measured the absorption of cosmic rays in large thicknesses of various absorbers and the results of Ehmert (1937) and Wilson (1938) are generally regarded as the most reliable.

By equating analytical expressions for the momentum spectrum and the range spectrum using the results then available Janossy (1948) finds the value of 2·0 MeV./g.cm.$^{-2}$ at all energies for the energy loss function in water. According to Halpern and Hall (1948) the rate of energy loss of mesons in water increases from 2·1 MeV./g.cm.$^{-2}$ at an energy of $0 \cdot 3 \times 10^9$ eV. to 2·6 MeV./g.cm.$^{-2}$ at an energy of 10^{10} eV.

George (1952) has analysed the results of all measurements down to a depth of 3000 m. of water equivalent. It is shown that the soft component cannot be regarded as being in equilibrium with the hard component at very great depths, as is generally assumed (e.g. Rossi 1948). The latter assumption is based on the results of Ehmert who measured the reduction in intensity at six depths by the insertion of 5 cm. of lead absorber. George shows further that the distribution with zenith angle varies with depth, and thus all absorption experiments using wide-angle telescope geometry require correction.

Although the greatest depth of water available locally was only 20 m. it was considered profitable to carry out an absorption experiment with narrow-angle telescope geometry and using the same thickness of lead absorber (10 cm.)

* Physics Department, University of Melbourne.

as had been used in the magnet spectrometer measurement performed here (Caro, Parry, and Rathgeber 1951).

It was decided also to measure the differential range spectrum to see if the anomaly in the momentum spectrum at 2·5 BeV./c., referred to by several authors (Blackett 1937 ; Glaser, Hamermesh, and Safonov 1950 ; Caro, Parry, and Rathgeber 1951), could be detected.

II. Description of Equipment

The apparatus consisted of a Geiger counter telescope which with associated amplifiers and battery supply was enclosed in a steel tank of approximate dimensions 6 ft. high by 2 ft. 3 in. diameter with a wall thickness of $\frac{1}{4}$ in.

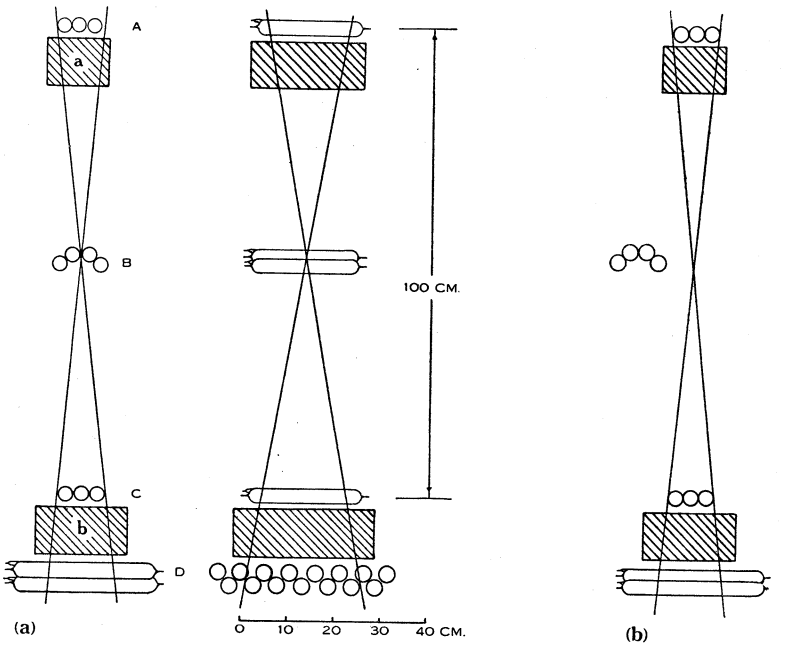

Fig. 1 (*a*).—Normal counter arrangement.
Fig. 1 (*b*).—Counter arrangement for shower measurement.

The threefold counter telescope (Fig. 1 (*a*)) registered particles penetrating 10 cm. of lead within an angle of 10° to the vertical, and a double layer anti-coincidence tray was placed after a further 10 cm. of lead. Measurements could thus be made simultaneously of the integral and differential range spectra.

The counters had a diameter of 3·4 cm. After they were filled with an argon-ethylene mixture in the proportion 10 : 1, the pressure was adjusted to give a starting voltage of 1000 ±10 V. The operating voltage was 1150 V.

The counters in trays *A*, *B*, and *C* had an effective length of 18 cm. and those in tray *D* an effective length of 22 cm. The lead absorber *a* was placed as high in the telescope as possible to prevent scattering in this absorber affecting the anti-coincidence count.

A preliminary experiment showed that the dimensions of tray D had to be twice those given by a linear extrapolation of the telescope geometry before the effect of scattering in absorber b could be regarded as negligible. This is consistent with the experience of Trumpy and Orlin (1943) and the dimensions of tray D in the experimental set-up were arranged to satisfy this condition.

Conventional Rossi circuits, each with a resolving time of 10 μsec., recorded threefold coincidences between trays A, B, and C, and between these and tray D.

A photograph of the mechanical recorders was taken every hour on "Super-XX" 16-mm. film by fitting an accurate chronometer with contacts which actuated the lights and camera through a relay system.

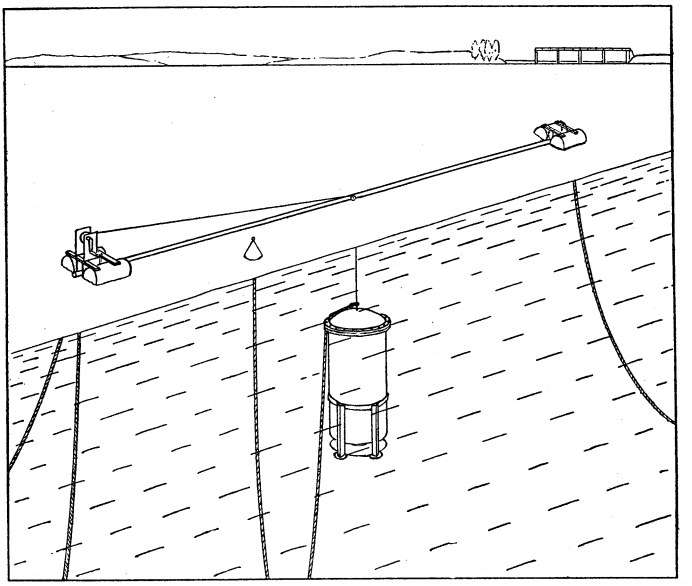

Fig. 2.—Arrangement for submerging apparatus.

The equipment was submerged at various depths down to a maximum of 18·3 m. in a freshwater reservoir at Melton, Victoria, the greatest depth being obtained during the winter of 1951. The apparatus, which had a weight of about 30 lb. when submerged, was supported by a $\frac{1}{4}$ in. steel wire from a light wooden beam $30\frac{1}{2}$ ft. long and was raised and lowered by a hand winch mounted at one end of the boom.

A safety rope (Fig. 2) with a buoy was attached to the tank and this had to be used on three occasions when the buoyancy tanks supporting the boom were punctured. The boom was provided with two anchors upstream and one downstream. A pontoon-type surface craft fitted with an overhead hoist could be brought over the boom and the apparatus hauled on deck for maintenance.

III. Experimental Results

Measurements were made of the integral and differential range spectra, up to an absorber thickness of 1900 g.cm.$^{-2}$ of water. The background counting rates for both measurements were taken as being the corresponding counting

rates when the coincidence trays were placed out of line (Fig. 1 (*b*)). The significance of this method is discussed in Section IV.

An additional background effect in the differential measurement was allowed for by taking a series of measurements with absorber *b* removed. This background was $2 \cdot 40 \pm 0 \cdot 05$ counts/hr. at sea-level and was approximately proportional to the integral counting rate at other depths.

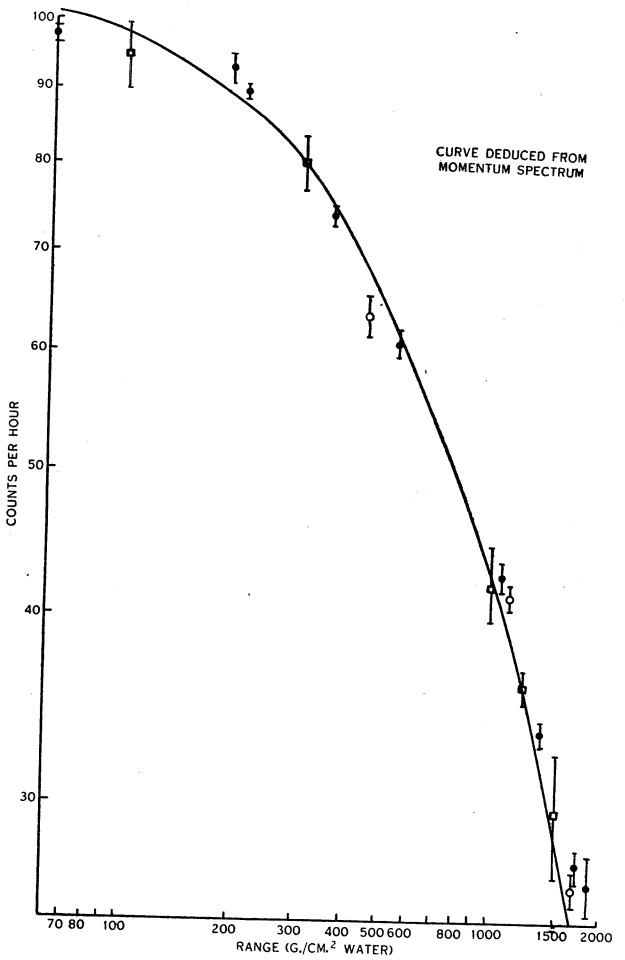

Fig. 3.—Integral range spectrum.
● Author. □ Ehmert. ○ Wilson.

The water equivalent absorber of the 10-cm. lead absorber was calculated to be 60 g.cm.$^{-2}$ from the data given by Rossi (1948) and Halpern and Hall (1948).

The final results are plotted in Figures 3 and 4 and presented in Tables 1 and 2.

In Figure 3 the integral results are compared with those of Ehmert (1937), Wilson (1938), and a curve deduced from the momentum spectrum determination

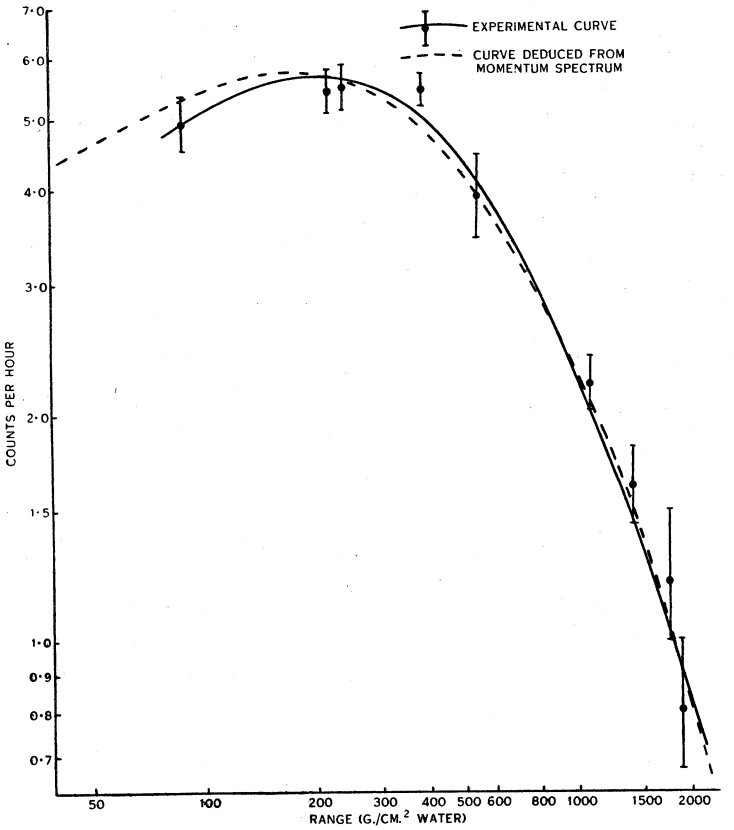

Fig. 4.—Differential range spectrum.

of Caro, Parry, and Rathgeber (1951). In order to convert the latter results into range spectra, the range energy relation for mesons in water was set up from the curves given by Halpern and Hall (1948).

TABLE 1

BACKGROUND MEASUREMENTS (COUNTS/HR.)

Depth (m. of water)	Showers		Absorber *b* Removed. Differential	Total Differential Background
	Integral	Differential		
0	11·1±0·5	0·71±0·08	2·40±0·05	3·11±0·10
2·1	8·8±0·4	0·65±0·08	1·93±0·04	2·58±0·10
3·1	7·8±0·4	0·60±0·08	1·77±0·04	2·37±0·09
6·1	5·6±0·2	0·34±0·06	1·25±0·03	1·59±0·07
9·1	4·9±0·3	0·28±0·05	1·10±0·02	1·38±0·06
12·2	4·1±0·3	0·25±0·05	0·88±0·02	1·13±0·06
15·3	3·8±0·3	0·20±0·05	0·73±0·02	0·93±0·06

TABLE 2

INTEGRAL AND DIFFERENTIAL RANGE SPECTRA

Depth (m. of water)	Integral		Differential	
	(Counts/hr.)	Range (g.cm.$^{-2}$ of water)	(Counts/hr.)	Range (g.cm.$^{-2}$ of water)
0·0	97·8±0·6	60	4·9±0·4	90
1·3	93·2±2·0	190	5·4±0·4	220
1·5	89·7±1·0	210	5·5±0·4	240
3·0	74·8±0·8	360	5·4±0·2	390
4·9	60·9±1·0	550	3·9±0·6	580
10·0	42·5±1·0	1060	2·2±0·3	1090
13·4	33·5±1·0	1400	1·6±0·3	1430
16·8	27·4±1·0	1740	1·2±0·3	1770
18·3	26·6±2·0	1890	0·8±0·2	1920

The differential results are presented in Figure 4, together with a comparison curve from the momentum spectrum (dotted line).

IV. DISCUSSION OF RESULTS

(a) *Integral Spectrum*

It can be seen from Figure 3 that the results are in satisfactory agreement with those of Ehmert (1937) and Wilson (1938), whose measurements were made without any lead absorber. The soft component may therefore be regarded as being in equilibrium with the hard component in this region, confirming the reports of Rossi (1948) and George (1952). The agreement between the present results and the curve deduced from the momentum spectrum is also satisfactory.

The shower measurements recorded here and used as a background correction were taken with the counter trays out of line in an attempt to avoid underestimating the penetrating shower component. This was done since the magnet spectrometer possesses a stronger bias against these events than the simple telescope geometry, and the absorption of showers is known to take place less rapidly than the single particle intensity (George 1952).

As the penetrating shower rate is found to be roughly proportional to the single particle rate at small depths of water, the shape of the absorption curve is not significantly affected here. The relative shower intensity observed was, however, about five times greater than the similar measurement without lead absorber by Ehmert who used a much smaller shower selection geometry, and would tend to remove the discrepancy found by Rathgeber (1951) who compared the absorption and momentum spectra at greater depths using the data of Halpern and Hall.

No such discrepancy is found by George (1952) but his values for the energy loss were taken from Fermi and do not exhibit the so-called logarithmic increase

of Halpern and Hall which appears to be confirmed by recent experiments (Becker *et al.* 1952 ; Taylor 1952).

(*b*) *Differential Spectrum*

The differential range spectrum is consistent with the momentum spectrum, but the results do not possess sufficient statistical accuracy for the observation of any anomaly at 2·5 BeV./c. momentum (approx. 1060 g.cm.$^{-2}$). The equipment is at present being modified for further examination of this feature.

By making use of the integral results to normalize to the data of Rossi (1948), the absolute differential intensity at 100 g.cm.$^{-2}$ of air equivalent is found to be 6·55 g.$^{-1}$sec.$^{-1}$sterad.$^{-1}$ in terms of air equivalent, which is 20 per cent. higher than Rossi's value of 5·40 g.$^{-1}$sec.$^{-1}$sterad.$^{-1}$. A recent measurement of the differential range spectrum in lead by York (1952) similarly gives a result 20 per cent. greater than the Rossi data. York concludes that the low value given by Rossi is due to the fact that no correction was made for particles scattered out of the counter telescope in the experiment on which his value is based. This opinion is supported by the present measurement in which considerable care was taken to ensure that only a negligible proportion of particles were scattered beyond the coverage of the anti-coincidence tray.

V. Acknowledgments

The author is indebted to Professor L. H. Martin, who suggested the problem, for his active interest, and to Dr. H. D. Rathgeber for advice in the design of the experiment. Thanks are also due to Mr. H. Waters and his associates who assisted in maintenance of the station. The cooperation of the Department of the Army, and the State Rivers and Water Supply Commission is also acknowledged.

VI. References

Becker, M. J., Chanson, M. P., Nageotte, M. E., Treille, M. P., Price, B. T., and Rothwell, P. (1952).—*Proc. Phys. Soc. Lond.* A **65** : 437.
Blackett, P. M. S. (1937).—*Proc. Roy. Soc.* A **159** : 2.
Caro, D. E., Parry, J. K., and Rathgeber, H. D. (1951).—*Aust. J. Sci. Res.* A **4** : 16.
Ehmert, A. (1937).—*Z. Phys.* **106** : 751.
George, E. P. (1952).—" Progress in Cosmic Ray Physics." (Ed. J. G. Wilson.) (Interscience Publishers : New York.)
Glaser, D. A., Hamermesh, B., and Safonov, G. (1950).—*Phys. Rev.* **80** : 625.
Halpern, O., and Hall, H. (1948).—*Phys. Rev.* **73** : 477.
Hughes, D. J. (1940).—*Phys. Rev.* **57** : 592.
Janossy, L. (1948).—" Cosmic Rays." (Oxford Univ. Press.)
Jones, H. (1939).—*Rev. Mod. Phys.* **11** : 235.
Rathgeber, H. D. (1951).—*Z. Naturf.* **6a** : 599.
Rossi, B. (1948).—*Rev. Mod. Phys.* **20** : 537.
Taylor, A. E. (1952).—*Rep. Progr. Phys.* **15** : 49.
Trumpy, B., and Orlin, J. (1943).—*Bergens Mus. Aarb. Naturvidensk.* **1943**, No. 7.
Wilson, J. G. (1946).—*Nature* **158** : 414.
Wilson, V. C. (1938).—*Phys. Rev.* **53** : 337.
York, C. M. (1952).—*Phys. Rev.* **85** : 998.